ONLINE CERTIFICATIONS DIRECTORY

Construction No. 506B
TGKX.506B
Roof Deck Constructions

Page Bottom

Design/System/Construction/Assembly Usage Disclaimer

- Authorities Having Jurisdiction should be consulted in all cases as to the particular requirements covering the installation and use of UL Listed or Classified products, equipment, system, devices, and materials.
- Authorities Having Jurisdiction should be consulted before construction.
- Fire resistance assemblies and products are developed by the design submitter and have been investigated by UL for compliance with applicable requirements. The published information cannot always address every construction nuance encountered in the field.
- When field issues arise, it is recommended the first contact for assistance be the technical service staff provided by the product manufacturer noted for the design. Users of fire resistance assemblies are advised to consult the general Guide Information for each product category and each group of assemblies. The Guide Information includes specifics concerning alternate materials and alternate methods of construction.
- Only products which bear UL's Mark are considered as Classified, Listed, or Recognized.

Roof Deck Constructions

See General Information for Roof Deck Constructions

Construction No. 506B

February 16, 2012

Uplift — Class 90

Fire Not Investigated

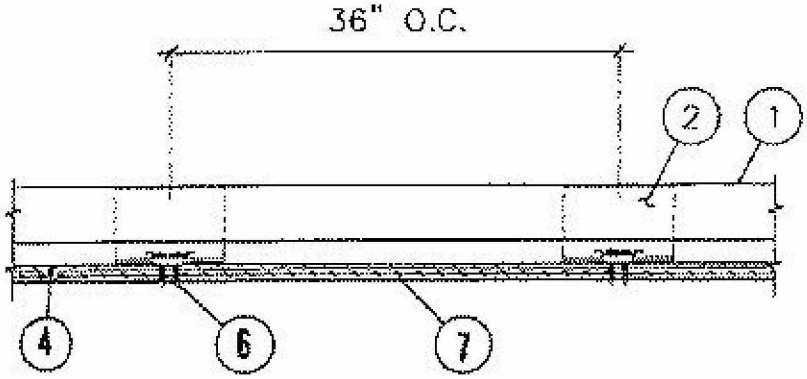

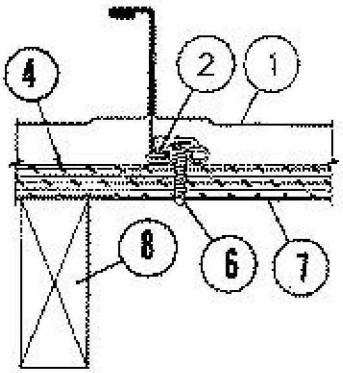

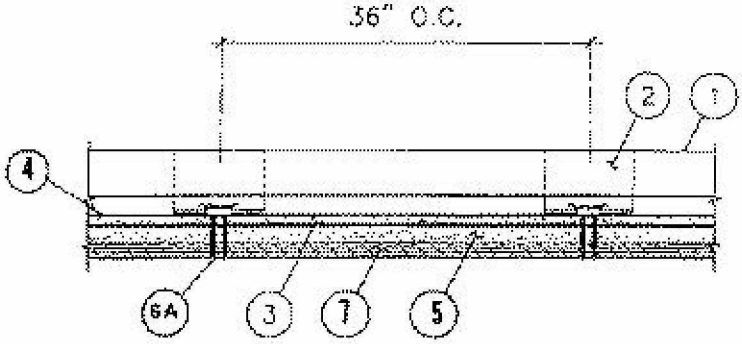

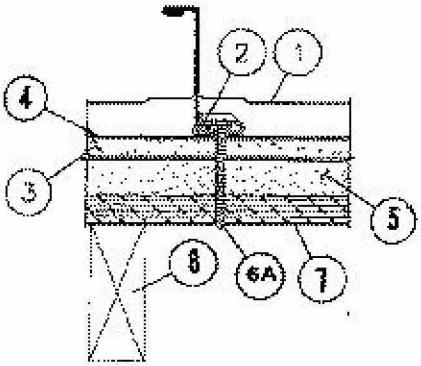

1. **Metal Roof Deck Panels* —** No. 24 MSG min coated steel. Max panel width 18 in.; min 12 in. Rib height 2 in. Panels continuous over three or more clips (Item 2). The panel flat area may have optional striated or minor ribs placed at various

locations in the panel flat area beginning min of 2 in. from side ribs. The upper flange of the panel rib may be horizontal, or optionally formed down to produce an angle of 0 to 90° between the vertical segment and the top flange of the rib. Panel end lap 2 in. min. An end lap back-up plate (Item 2A) to be used at panel end lap. A bead of sealant may be used at panel end lap and side ribs. Ribs to be seamed with an electric or hand seaming tool to form a flange with a tight hem. Seaming process to include the upper portion of the panel clips (Item 2) .

ACI BUILDING SYSTEMS INC (View Classification) — "UltraLok", "UltraLok 216", "UltraLok 218"

ALLIANCE STEEL INC (View Classification) — "Alliance Lok 212", "Alliance Lok 216", "Alliance Lok 218"

ARCHITECTURAL INTEGRATED METALS INC (View Classification) — "AIM-Lok"

BEHLEN MFG CO (View Classification) — "ZL-16"

BIGBEE STEEL BUILDINGS INC (View Classification) — "Bigbee VR"

CENTRIA (View Classification) — "SDP200-12", "SDP200-16", "SDP200-18"

CONSOLIDATED SYSTEMS INC (View Classification) — "SSS2"

MCELROY METAL MILL INC (View Classification) — "Maxima-212", "Maxima-216", "Maxima-218", "Maxima ADV"

METAL SALES MFG CORP (View Classification) — "Magna-Loc 16", "Magna-Loc 18" or "Magna-Loc 180" (180° Seam)

MBCI (View Classification) — "BattenLok HS"

RIGID GLOBAL BUILDINGS L L C (View Classification) — "Platinum Series"

SCHULTE BUILDING SYSTEMS LP (View Classification) — "VS-216"

SOUTHEASTERN METALS MANUFACTURING CO

INC (View Classification) — "Rock-Lok"

TRIAD CORRUGATED METALS INC (View Classification) — "MS216" or "MS218"

WHIRLWIND STEEL BUILDINGS INC (View Classification) — "WeatherLok-16"

1A. **Metal Roof Deck Panels* —** (Not Shown) - Panels (coated steel only) may be physically or mechanically curved at a radius of 4 ft. or greater.

MCELROY METAL MILL INC (View Classification) — "Maxima ADV"

2. **Roof Deck Fasteners - (Panel Clips) —** Located at side of panels (Item 1) over substructure (Item 3, 3A, 3B or 3C with max spacing of 36 in. OC), or plywood decking (Item 7 with max spacing of 36 in. OC). Either of the following:

Fixed Clip — (Not Shown) - One piece assembly fabricated from No. 22 MSG min thick steel, 3-1/2 in. wide.

BUILDING RESEARCH SYSTEMS INC (View Classification) — "Challenger 100 Fixed Clip"

MCELROY METAL MILL INC (View Classification) — "Maxima Fixed Clip"

Floating Clip — Two piece assembly with a base fabricated from No. 16 MSG min thick steel, 2 in. wide and a tab fabricated from No. 22 MSG min thick steel, 4-1/4 in. wide.

BUILDING RESEARCH SYSTEMS INC (View Classification) — "Challenger 100 Floating Clip"

MCELROY METAL MILL INC (View Classification) — "Maxima Floating Clip"

Floating Clip— Two piece assembly with a base fabricated from No. 16 MSG min thick steel, 3-3/8 in. wide and a top fabricated from No. 22 MSG min thick steel, 4-5/16 in. wide.

BUILDING RESEARCH SYSTEMS INC (View Classification) — "MPS-PC Floating Clip"

2A. **End Lap Back-Up Plate —** (Not Shown) - No. 16 MSG min thick coated steel channel, 3 in. wide with two 3/8 in. deep legs. Max length 74 in. Located under the panel (Item 1) end lap (50 ksi min yield strength).

2B. **End Lap Back-Up-Plate —** (Optional) (Not Shown) - No. 16 MSG min thick coated steel. Width 11, 15 or 17 in., length 7 in. Two 3/4 in. by 3/4 in. tabs and a 1 in. deep vertical leg located at upslope edge of panel (50 ksi min yield strength).

2C. **Roof Deck Fasteners*(Cinch Plate)-(Optional)-(Not Shown) —** width 1-5/16 in. length 18 in. max. Fabricated from No. 20 MSG min thick stanless steel. Located over end lap.

2D. **Roof Deck Fasteners (Panel Clips) —** Two piece assembly with a base fabricated from No. 16 MSG min thick steel, 2 in. wide and a tab fabricated from No. 22 MSG min thick steel, 4-in. wide. Shall be used with Panel, Item 1A.

METAL FORMING INC (View Classification) — "2000SNS"

3. **Substructure - (Gypsum Board) —** (Optional) - Min thick 1/2 in. To be placed on top of either the plywood decking (Item 7) or rigid insulation (Item 5). Combined thickness of the gypsum board and rigid insulation not to exceed 4 in. All joints to be taped with 2.5 in. wide joint tape.

3A. **Substructure - (Plywood) —** (Optional) - (Not Shown) - Plywood decking, used in lieu of gypsum board (Item 3), to be nom 1/2 in. thick, exposure 1 sheathing, 40/20, CD. Located over rigid insulation (Item 5). Combined thickness of the plywood and rigid insulation (Item 5) not to exceed 4 in.

3B. **Substructure - (OSB) —** (Optional) - (Not Shown) - OSB decking, used in lieu of gypsum board (Item 3), to be nom 1/2 in. thick. Located over rigid insulation (Item 5) . Combined thickness of the OSB and rigid insulation not to exceed 4 in.

3C. **Substructure - (Bearing Plate) —** (Optional) - (Not Shown) - Bearing plate to be used in lieu of gypsum board (Item 3) to be 4 by 4 in. by No. 18 MSG min thick coated steel (33 ksi min yield strength). Used under each clip (Item 2) over rigid insulation (Item 5) only when rigid insulation is located directly under panel (Item 1).

4. **Vapor Barrier —** (Optional) - Single ply, used between the substructure (Items 3, 3A or 3B) or plywood decking (Item 7) and panels (Item 1). To be min 30 lb roofing felt.

5. **Foamed Plastic - (Rigid Insulation) - (Optional) —** Max thickness 3-1/2 in. when gypsum board (Item 3), plywood (Item 3A) or OSB (Item 3B) is used and 6 in. when bearing plates (Item 3C) are used. Min bearing strength to be 20 psi. 1.8 pcf min density.

6. **Fasteners - (Screws) —** Fasteners used to attach panel clips (Item 2) to plywood substructure (Item 3A) or plywood decking (Item 7) to be No. 10-12 pancake head, No. 2 Phillips drive, A-point, coated steel screw, or No. 14-10 HHA plated steel self tapping steel screw. Fastener length to penetrate plywood min 1/2 in. Two fasteners per clip. Fasteners (screws) used with Metal Roof Deck Panel designated Maxima ADV, Item 1, and Roof Deck Fasteners (panel clips) in Item 2 shall be 2 in. min. length. When used with curved panel, length to be min. 1 in.

6A. **Fasteners - (Screws) —** Fasteners used to attach panel clips (Item 2) through gypsum board, OSB or bearing plate (Item 3, 3B, or 3C, respectively) and foam plastic insulation (Item 5) into plywood deck (Item 7) to be No. 10-12 pancake head, No. 2 Phillips drive, A-point, steel screw. Two screws used per clip.

Note: The panel clips may be fastened to the bearing plate using two No. 10-16 by 1 in. long self-driving, self-tapping, pancake head No. 2 Phillips drive coated steel screws. The panel clip/bearing plate combination is to be fastened to the plywood deck using two No. 12-13 No. 3 Phillips Drive coated steel truss head screws, inserted through a guide hole in the clip and bearing plate and into the plywood deck.

6B. **Fasteners - (Screws) —** (Not Shown) - Fasteners used to attach plywood Substructure (Item 3A) through rigid insulation (Item 5) into plywood deck (Item 7) to be No. 14-13, No. 3 Phillips drive truss head screws. Fastener length to penetrate plywood deck min 1/2 in. Total of 33 fasteners per 4 by 8 ft plywood sheet to be used. Fasteners located in five rows along the 4 ft length in a 3-9-12-12-9-3 in. pattern. The two outer rows are in a 3-9-12-12-12-12-12-12-9-3 in. pattern and the three center rows are in a 3-21-24-24-21-3 in. pattern. All spacing from board edges.

6C. **Fasteners - (Screws) —** (Not Shown) - Fasteners used at end laps of panel (Item 1) to be one of the following: No. 1/4-14 by 1 in. long, Type AB point self-drilling, self-tapping, hex-washer-head, plated or stainless steel screws or No. 12-14 by 1-1/2 in. long self-drilling, self-tapping, hex-washer-head, plated steel screws. Spacing for 16 in. wide panels to be 1, 3, 4, 4, 3 in. pattern; spacing for 18 in. wide panels to be 1-1/2, 3-1/2, 4, 4, 3-1/2, 1-1/2 in. pattern.

7. **Plywood Deck —** Plywood decking to be graded per PS83 specifications, 19/32 in. thick, exposure 1, APA rated sheathing, 40/20 in. OC, square edged. Butt ends not blocked.

8. **Purlins - Deck Supports —** Spaced a max of 24 in. OC. Any of the following types may be used:

A. No. 22 MSG min thick coated steel. (33 ksi min yield strength.)

B. Graded dimension lumber, No. 2 or better.

8A. **Plywood Fasteners —** (Not Shown) - Fasteners used to attach the plywood deck (Item 7) to the supports (Item 8) to be as follows:

a. For plywood-to-wood supports, No. 8-18 by 1-7/8 in. long bugle-head steel screws with a No. 2 Phillips drive, a "Hi-Low" thread pattern and an "S-Point".

b. As an alternate to Item a, No. 8d common deformed shank nails may be used.

c. For plywood-to-steel supports for a steel thickness less than No. 20 MSG, No. 7-19 by 1-1/4 in. long bugle-head steel screws with a No. 2 Phillips head drive, a "Hi-Low" thread pattern and an "S-Point". For a steel thickness greater than No. 20 MSG to No. 16 MSG, No. 6-20 by 1-1/4 in. long in. long bugle-head steel screws with a No. 2 Phillips drive and an S12 (Tek/3) point.

Spacing - For all fastener types to be 6 in. OC at the plywood edges and 12 in. OC in the interior.

Refer to general information, Roof Deck Construction, (Roofing Materials and System Directory) for items not evaluated.

*Bearing the UL Classification Mark

Last Updated on 2012-02-16

© 2012 UL LLC

The appearance of a company's name or product in this database does not in itself assure that products so identified have been manufactured under UL's Follow-Up Service. Only those products bearing the UL Mark should be considered to be Listed and covered under UL's Follow-Up Service. Always look for the Mark on the product.

UL permits the reproduction of the material contained in the Online Certification Directory subject to the following conditions: 1. The Guide Information, Designs and/or Listings (files) must be presented in their entirety and in a non-misleading manner, without any manipulation of the data (or drawings). 2. The statement "Reprinted from the Online Certifications Directory with permission from UL" must appear adjacent to the extracted material. In addition, the reprinted material must include a copyright notice in the following format: "© 2012 UL LLC".